IN HOUSE ASSEMBLY TEMPLATE

METAL ACTIVITY TABLE

X7001, X7002, X7003 & X8001, X8002, X8003 SERIES TABLES
ASSEMBLY INSTRUCTIONS

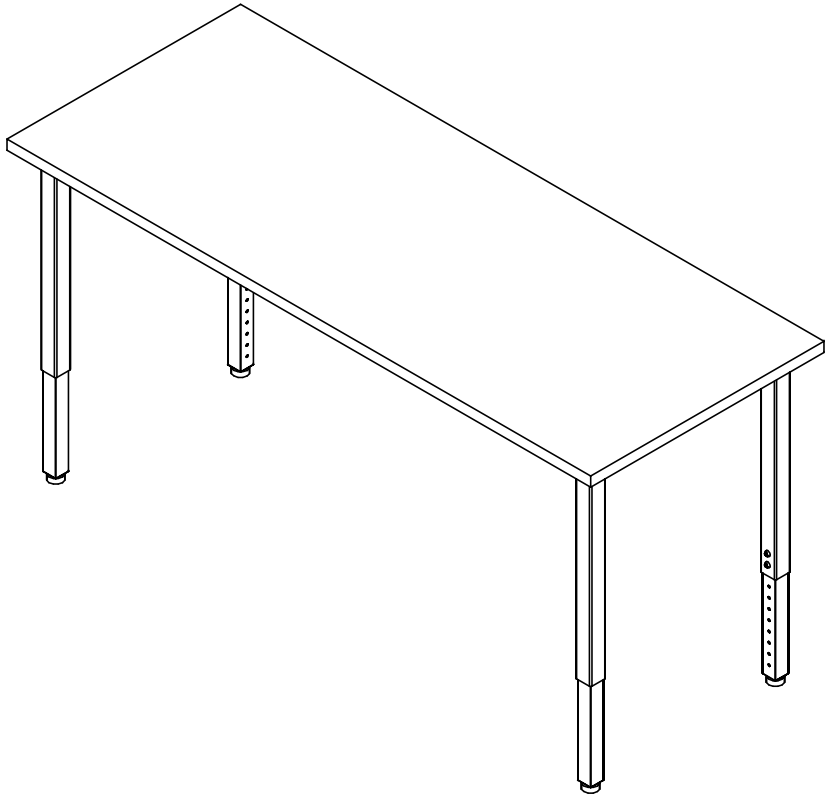

NOTE:

1. MODEL VIEWS MAY NOT REPRESENT EXACT MODEL PURCHASED

REV.	DESCRIPTION	DATE	NAME	ECN NO.
A	CREATED ASSEMBLY INSTRUCTIONS	3/3/14	EMK	-

REVISION LEVEL

ALL DIMENSIONS ARE IN INCHES UNLESS NOTED OTHERWISE CABINET SQUARENESS = ± .0625 FRACTIONAL VALUES = ± 1/32" - ALL VALUES ± OVERALL -	DWN BY:	EMK	DATE DWN: 3/3/14
	APR BY:		DATE APR:
	APR BY:		DATE APR:

CONFIDENTIAL:
ALL DESIGN RIGHTS RESERVED
THE INFORMATION, DATA, DESIGN, AND DRAWINGS EMBODIED IN THIS DOCUMENT AND ALL REPRODUCTIONS THEREOF ARE THE EXCLUSIVE PROPERTY OF DIVERSIFIED WOODCRAFTS, INC.

THESE DOCUMENTS ARE SUPPLIED WITH THE UNDERSTANDING THAT THEY WILL NOT BE DISCLOSED TO THIRD PARTIES WITHOUT WRITTEN CONSENT OF DIVERSIFIED WOODCRAFTS, INC. ANY REPRODUCTION IN PART OR WHOLE WITHOUT WRITTEN CONSENT IS SUBJECT TO LEGAL ACTION.

TITLE:
METAL ACTIVITY TABLE
ASSEMBLY INSTRUCTIONS

DRAWING NUMBER:	SCALE:	SHEET:	REVISION:
X700(1,2,3) & X800(1,2,3) SERIES	NTS	1 OF 6	REV A

IN HOUSE ASSEMBLY TEMPLATE

TOOLS REQUIRED
½" WRENCH
½" SOCKET AND TORQUE WRENCH - OPTIONAL
* 11/64" DRILL BIT *
** 3/16" ALLEN WRENCH **

ASSEMBLY COMPONENTS			
ITEMS INCLUDED	**PART #**	**PART DESCRIPTION**	**QTY**
TOP ASSEMBLY	VARIES	VARIES WITH STYLE	1
STEEL FRAME	VARIES	VARIES WITH STYLE	1
LEG KIT - X7000 SERIES	249375	LEG KIT - FIXED HEIGHT LEGS	1
OR			
LEG KIT - X8000 SERIES	249374	LEG KIT - ADJ. HEIGHT LEGS	1

NOTE:

1. TOPS WILL EITHER BE 1 ¼" PLAM, 1" PHENOLIC, OR 1 ¼" CHEMGUARD.
2. *XX* INDICATES ITEMS USED ONLY FOR 1" PHENOLIC TOPS.
3. **XX** INDICATES ITEMS USED ONLY FOR ADJUSTABLE HEIGHT TABLES (X8000 SERIES).

REV.	DESCRIPTION	DATE	NAME	ECN NO.
A	CREATED ASSEMBLY INSTRUCTIONS	3/3/14	EMK	-

REVISION LEVEL

ALL DIMENSIONS ARE IN INCHES UNLESS NOTED OTHERWISE

CABINET SQUARENESS = ± .0625
FRACTIONAL VALUES = ± 1/32"
- ALL VALUES ± OVERALL -

DWN BY:	EMK	DATE DWN:	3/3/14
APR BY:		DATE APR:	
APR BY:		DATE APR:	

CONFIDENTIAL:
ALL DESIGN RIGHTS RESERVED
THE INFORMATION, DATA, DESIGN, AND DRAWINGS EMBODIED IN THIS DOCUMENT AND ALL REPRODUCTIONS THEREOF ARE THE EXCLUSIVE PROPERTY OF DIVERSIFIED WOODCRAFTS, INC.

THESE DOCUMENTS ARE SUPPLIED WITH THE UNDERSTANDING THAT THEY WILL NOT BE DISCLOSED TO THIRD PARTIES WITHOUT WRITTEN CONSENT OF DIVERSIFIED WOODCRAFTS, INC. ANY REPRODUCTION IN PART OR WHOLE WITHOUT WRITTEN CONSENT IS SUBJECT TO LEGAL ACTION.

TITLE:
METAL ACTIVITY TABLE
TOOLS AND ASSEMBLY COMPONENTS

DRAWING NUMBER:	SCALE:	SHEET:	REVISION:
X700(1,2,3) & X800(1,2,3) SERIES	NTS	2 OF 6	REV A

IN HOUSE ASSEMBLY TEMPLATE

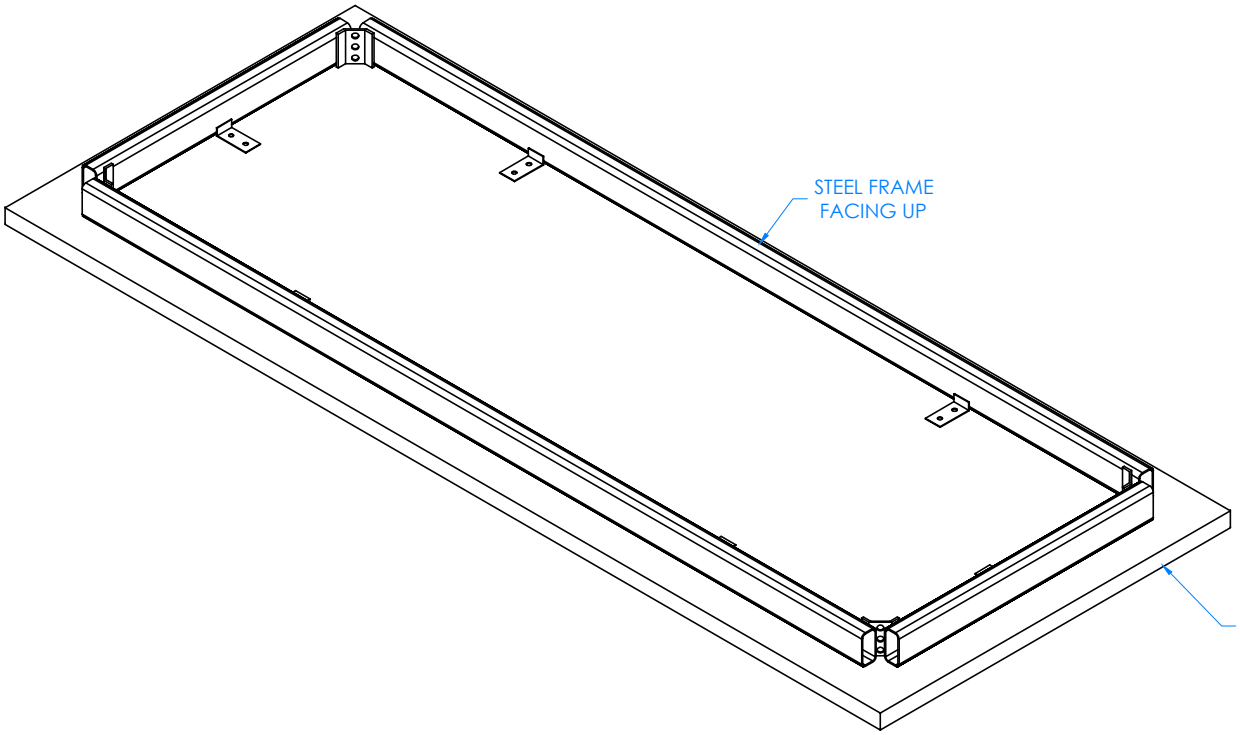

STEP 1:

- LAY TOP ASSEMBLY ON FLOOR WITH STEEL FRAME FACING UP.

NOTE:

1.

REV.	DESCRIPTION	DATE	NAME	ECN NO.
A	CREATED ASSEMBLY INSTRUCTIONS	3/3/14	EMK	-

REVISION LEVEL

ALL DIMENSIONS ARE IN INCHES UNLESS NOTED OTHERWISE

CABINET SQUARENESS = ± .0625
FRACTIONAL VALUES = ± 1/32"
- ALL VALUES ± OVERALL -

DWN BY:	EMK	DATE DWN:	3/3/14
APR BY:		DATE APR:	
APR BY:		DATE APR:	

CONFIDENTIAL:
ALL DESIGN RIGHTS RESERVED
THE INFORMATION, DATA, DESIGN, AND DRAWINGS EMBODIED IN THIS DOCUMENT AND ALL REPRODUCTIONS THEREOF ARE THE EXCLUSIVE PROPERTY OF DIVERSIFIED WOODCRAFTS, INC.

THESE DOCUMENTS ARE SUPPLIED WITH THE UNDERSTANDING THAT THEY WILL NOT BE DISCLOSED TO THIRD PARTIES WITHOUT WRITTEN CONSENT OF DIVERSIFIED WOODCRAFTS, INC. ANY REPRODUCTION IN PART OR WHOLE WITHOUT WRITTEN CONSENT IS SUBJECT TO LEGAL ACTION.

TITLE:
METAL ACTIVITY TABLE
ASSEMBLY INSTRUCTIONS

DRAWING NUMBER:	SCALE:	SHEET:	REVISION:
X700(1,2,3) & X800(1,2,3) SERIES	NTS	3 OF 6	REV A

STEP 2:

- INSERT HANGER BOLT ON ONE LEG THROUGH THE CORNER BRACKET AND INSERT LOCK WASHER AND HEX NUT.
- TIGHTEN BOLT USING ½" WRENCH OR ½" SOCKET AND TORQUE WRENCH.
- FOR PLAM OR CHEMGUARD TOPS, USE SCREWS PROVIDED AND SCREW THRU LEG FLANGE INTO TABLE TOP.
- FOR 1" PHENOLIC TOPS, PRE-DRILL PILOT HOLES INTO TOP ½" DEEP WITH 1/64" DRILL BIT AND SCREW THRU LEG FLANGE INTO TABLE TOP.
- MAKE SURE LEG IS SCREWED ON TIGHT.
- REPEAT FOR OTHER LEGS.

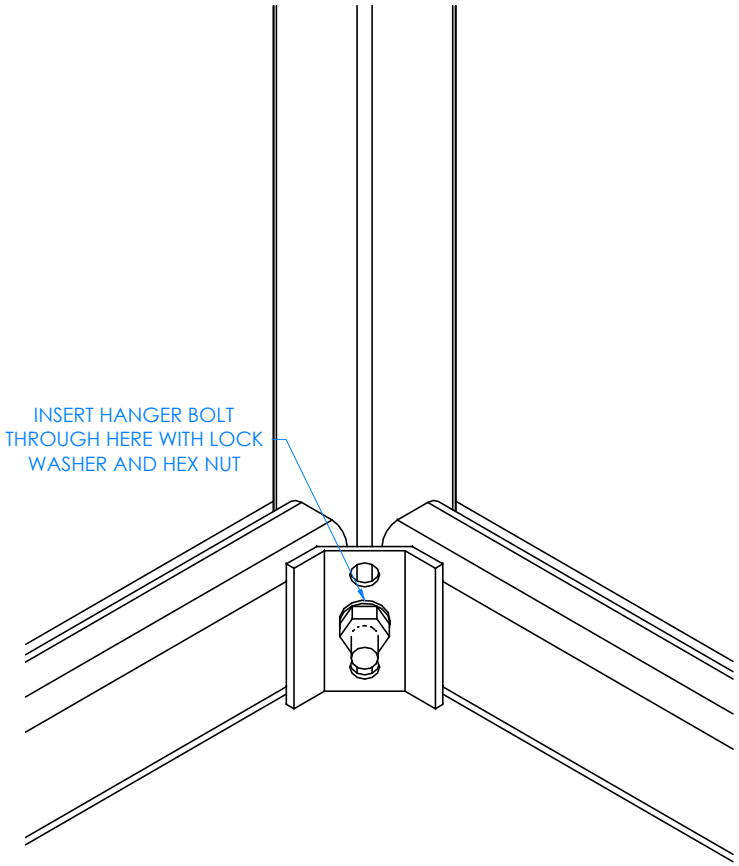

CLOSE UP OF CORNER LEG ASSEMBLY

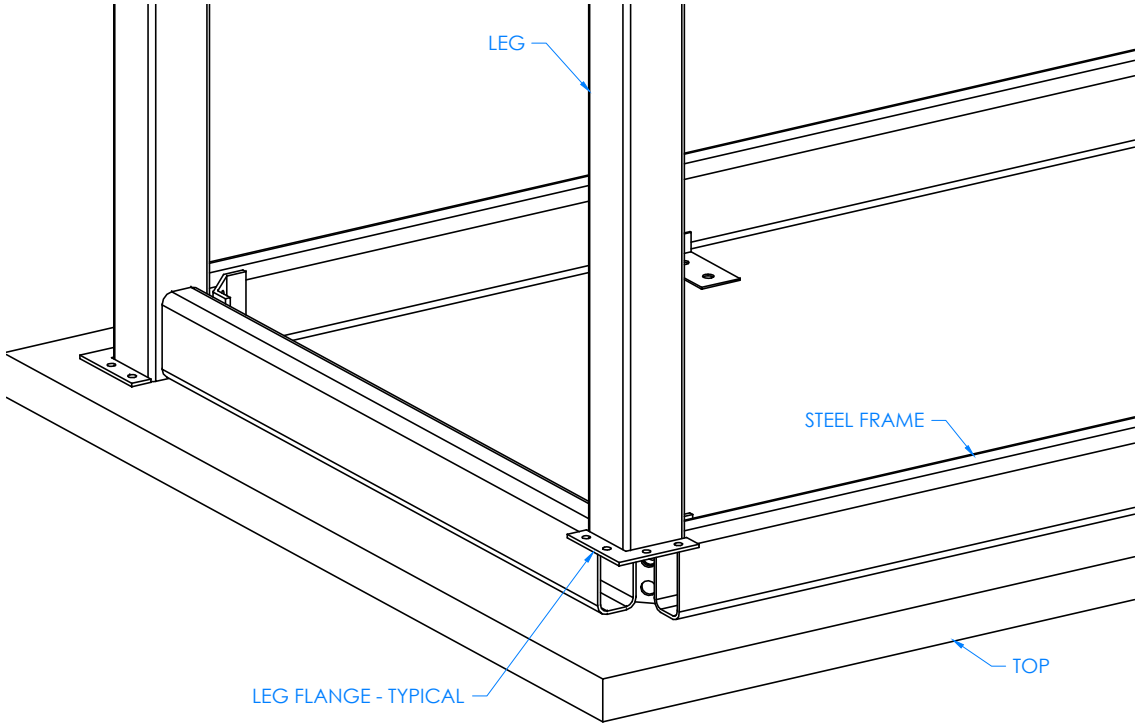

NOTE:

1.

A	CREATED ASSEMBLY INSTRUCTIONS	3/3/14	EMK	-
REV.	DESCRIPTION	DATE	NAME	ECN NO.
REVISION LEVEL				

ALL DIMENSIONS ARE IN INCHES UNLESS NOTED OTHERWISE

CABINET SQUARENESS = ± .0625
FRACTIONAL VALUES = ± 1/32"
- ALL VALUES ± OVERALL -

DWN BY:	EMK	DATE DWN:	3/3/14
APR BY:		DATE APR:	
APR BY:		DATE APR:	

CONFIDENTIAL:
ALL DESIGN RIGHTS RESERVED
THE INFORMATION, DATA, DESIGN, AND DRAWINGS EMBODIED IN THIS DOCUMENT AND ALL REPRODUCTIONS THEREOF ARE THE EXCLUSIVE PROPERTY OF DIVERSIFIED WOODCRAFTS, INC.

THESE DOCUMENTS ARE SUPPLIED WITH THE UNDERSTANDING THAT THEY WILL NOT BE DISCLOSED TO THIRD PARTIES WITHOUT WRITTEN CONSENT OF DIVERSIFIED WOODCRAFTS, INC. ANY REPRODUCTION IN PART OR WHOLE WITHOUT WRITTEN CONSENT IS SUBJECT TO LEGAL ACTION.

TITLE:
METAL ACTIVITY TABLE
ASSEMBLY INSTRUCTIONS

DRAWING NUMBER:	SCALE:	SHEET:	REVISION:
X700(1,2,3) & X800(1,2,3) SERIES	NTS	4 OF 6	REV A

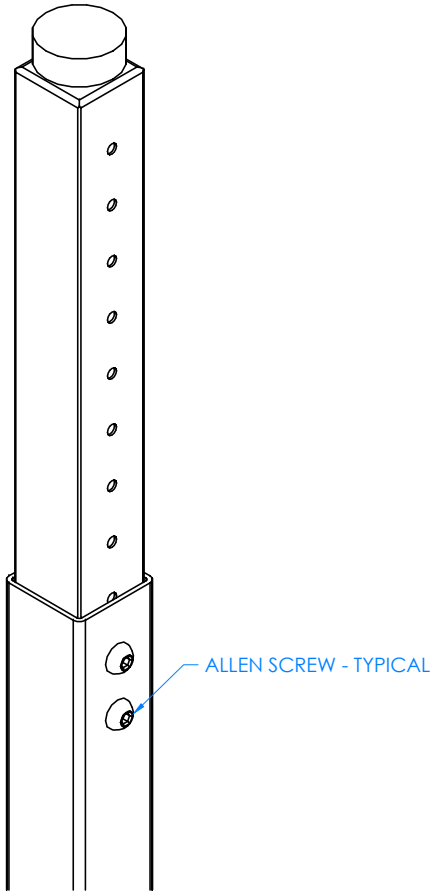

CLOSE UP OF X8000 SERIES LEG ASSEMBLY

STEP 3:

- IF YOU DO NOT HAVE THE X8000 SERIES, SKIP TO STEP 4.
- ADJUST LEGS TO DESIRED HEIGHT BY REMOVING TWO ALLEN SCREWS IN EACH LEG.
- BE CAREFUL TO SUPPORT THE LEG AS IT WILL FALL ONCE SCREWS ARE REMOVED.
- MOVE LEG TO A NEW HEIGHT AND RE-INSERT ALLEN SCREWS AND TIGHTEN.
- REPEAT FOR OTHER LEGS.

NOTE:

1.

REV.	DESCRIPTION	DATE	NAME	ECN NO.
A	CREATED ASSEMBLY INSTRUCTIONS	3/3/14	EMK	-

REVISION LEVEL

ALL DIMENSIONS ARE IN INCHES UNLESS NOTED OTHERWISE CABINET SQUARENESS = ± .0625 FRACTIONAL VALUES = ± 1/32" - ALL VALUES ± OVERALL -	DWN BY:	EMK	DATE DWN: 3/3/14
	APR BY:		DATE APR:
	APR BY:		DATE APR:

CONFIDENTIAL:
ALL DESIGN RIGHTS RESERVED
THE INFORMATION, DATA, DESIGN, AND DRAWINGS EMBODIED IN THIS DOCUMENT AND ALL REPRODUCTIONS THEREOF ARE THE EXCLUSIVE PROPERTY OF DIVERSIFIED WOODCRAFTS, INC.

THESE DOCUMENTS ARE SUPPLIED WITH THE UNDERSTANDING THAT THEY WILL NOT BE DISCLOSED TO THIRD PARTIES WITHOUT WRITTEN CONSENT OF DIVERSIFIED WOODCRAFTS, INC. ANY REPRODUCTION IN PART OR WHOLE WITHOUT WRITTEN CONSENT IS SUBJECT TO LEGAL ACTION.

TITLE:
METAL ACTIVITY TABLE
ASSEMBLY INSTRUCTIONS

DRAWING NUMBER:	SCALE:	SHEET:	REVISION:
X700(1,2,3) & X800(1,2,3) SERIES	NTS	5 OF 6	REV A

IN HOUSE ASSEMBLY TEMPLATE

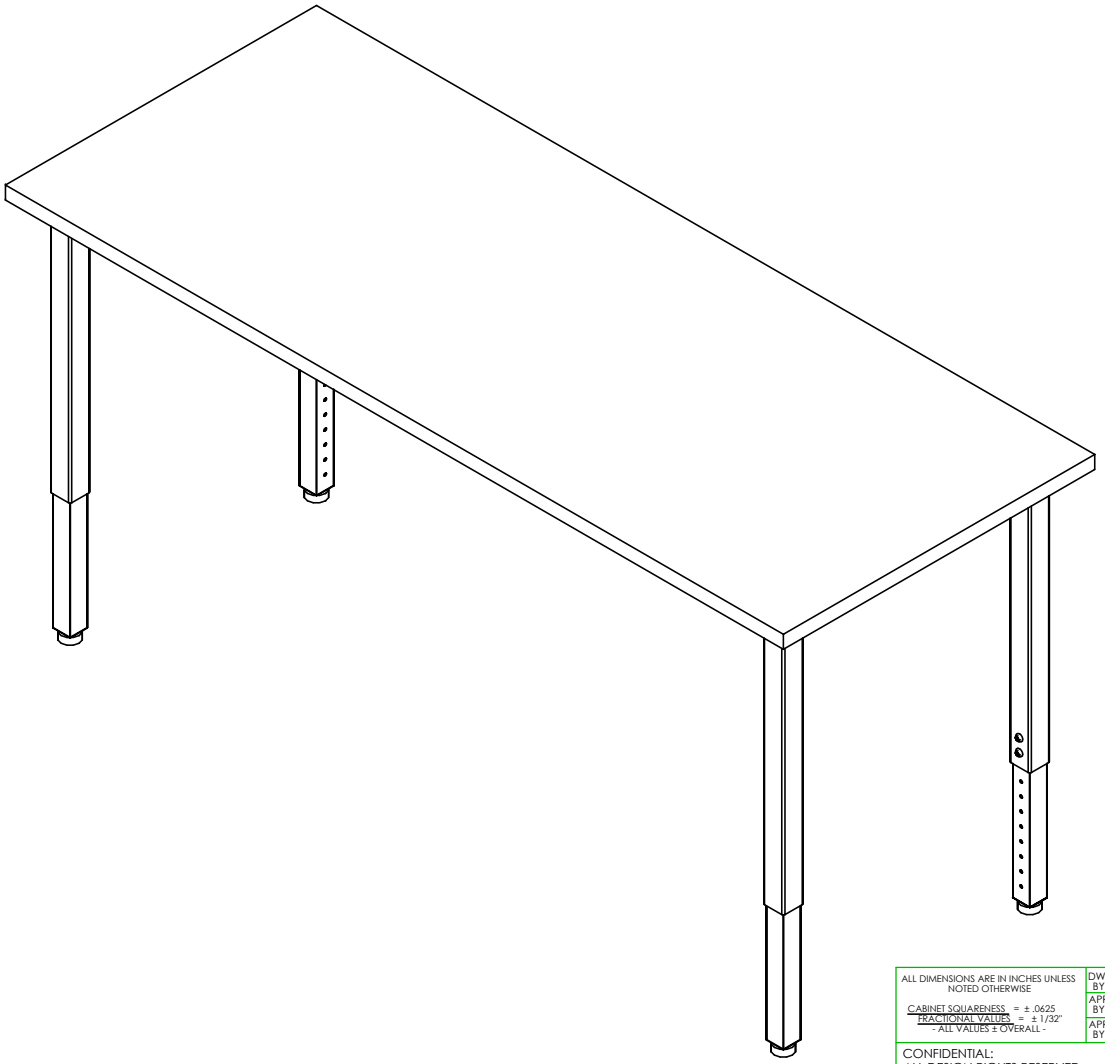

COMPLETE UNIT SHOWN

STEP 4:

- TURN TABLE OVER SO TOP IS UP.
- SET YOUR TABLE IN DESIRED LOCATION.
- ADJUST LEG LEVELERS TO LEVEL TABLE.

NOTE:

1.

REV.	DESCRIPTION	DATE	NAME	ECN NO.
A	CREATED ASSEMBLY INSTRUCTIONS	3/3/14	EMK	-

REVISION LEVEL

ALL DIMENSIONS ARE IN INCHES UNLESS NOTED OTHERWISE

CABINET SQUARENESS = ± .0625
FRACTIONAL VALUES = ± 1/32"
- ALL VALUES ± OVERALL -

DWN BY:	EMK	DATE DWN:	3/3/14
APR BY:		DATE APR:	
APR BY:		DATE APR:	

CONFIDENTIAL:
ALL DESIGN RIGHTS RESERVED
THE INFORMATION, DATA, DESIGN, AND DRAWINGS EMBODIED IN THIS DOCUMENT AND ALL REPRODUCTIONS THEREOF ARE THE EXCLUSIVE PROPERTY OF DIVERSIFIED WOODCRAFTS, INC.

THESE DOCUMENTS ARE SUPPLIED WITH THE UNDERSTANDING THAT THEY WILL NOT BE DISCLOSED TO THIRD PARTIES WITHOUT WRITTEN CONSENT OF DIVERSIFIED WOODCRAFTS, INC. ANY REPRODUCTION IN PART OR WHOLE WITHOUT WRITTEN CONSENT IS SUBJECT TO LEGAL ACTION.

TITLE:
METAL ACTIVITY TABLE
ASSEMBLY INSTRUCTIONS

DRAWING NUMBER:	SCALE:	SHEET:	REVISION:
X700(1,2,3) & X800(1,2,3) SERIES	NTS	6 OF 6	REV A